Dimension Guide

Induction hob

600 SERIES

Model:
CIV60344CW

Dimensions			
	width	height	depth
Cut-out (mm)	560	-	490
Product (mm)	590	44	520

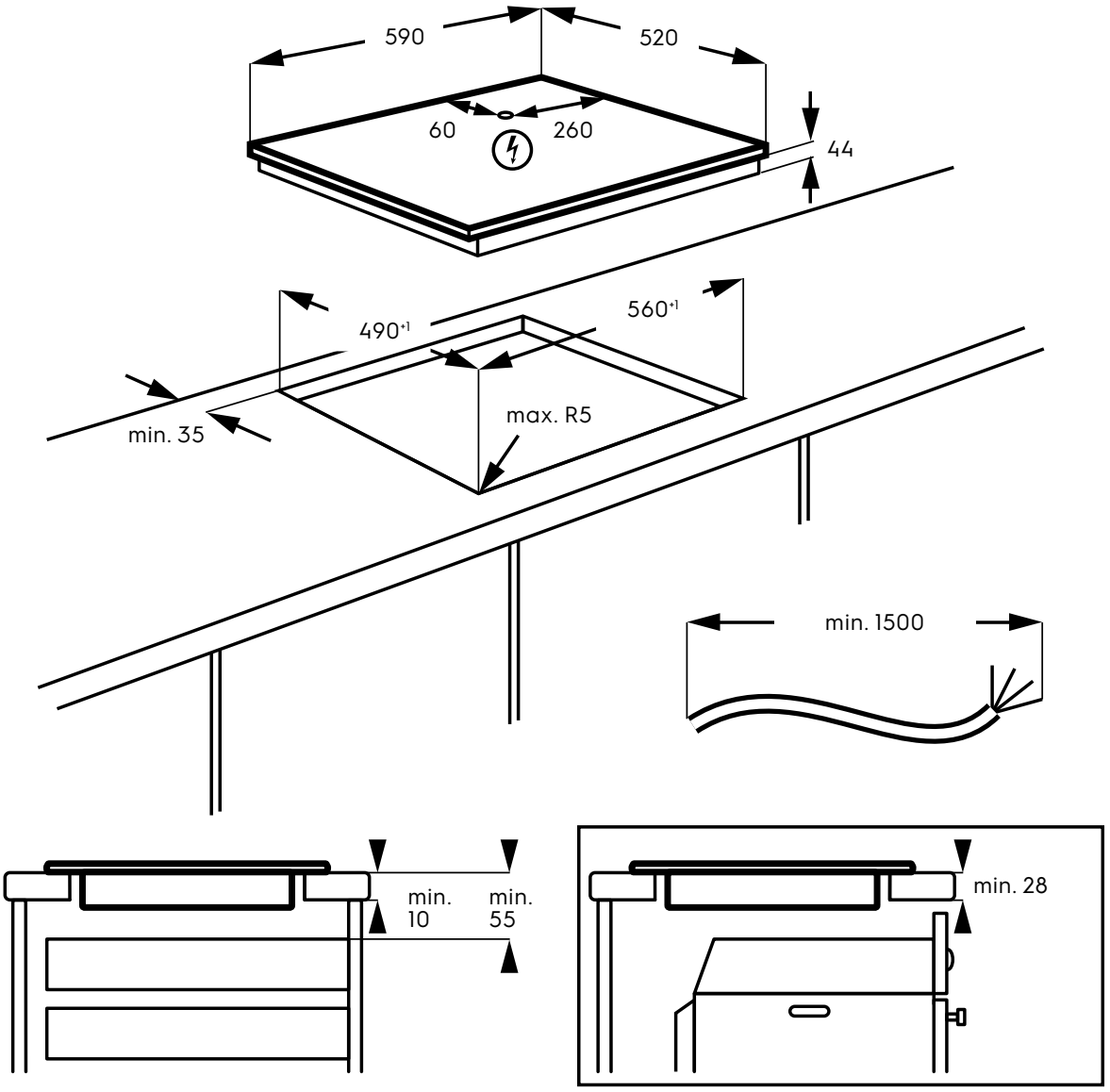

Please note! Dimensions to be used as a guide only. All customers MUST refer to the user manual supplied with the product for detailed installation instructions.

© 2026 Electrolux S.E.A. PTE. LTD. ELX_DIM_CIV60344CW_Apr26

Electrolux